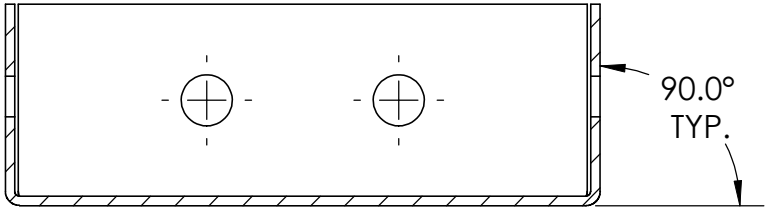

SECTION A-A

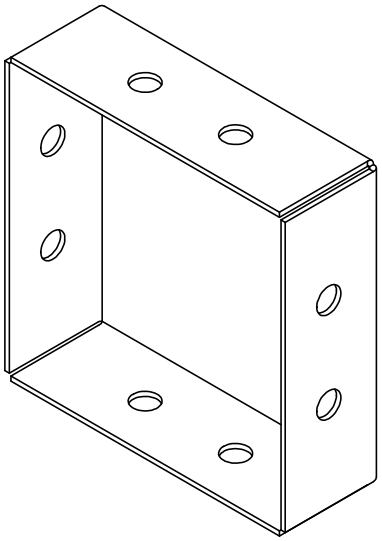

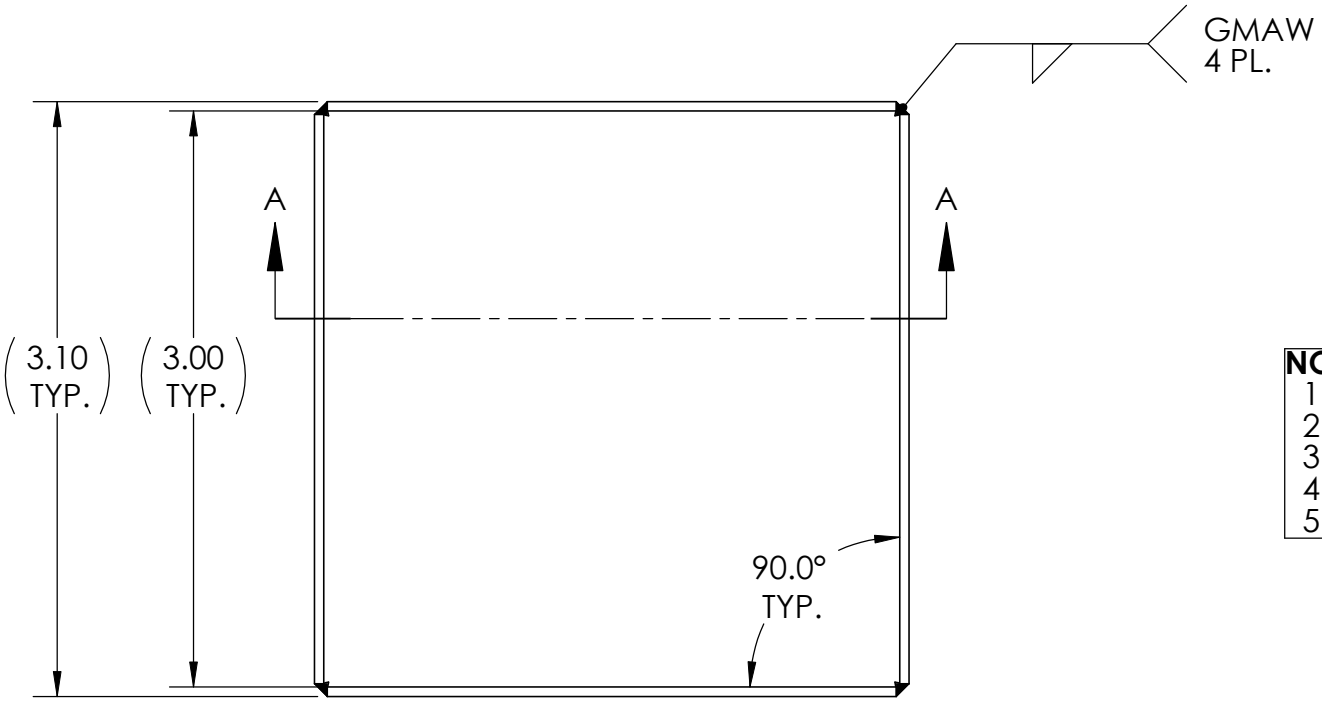

NOTES:
1. QTY: 1
2. ALL DIMS IN INCHES
3. MAT'L: 0.049" STEEL SHEET
4. RAW FINISH IS OKAY
5. DEBUR ALL EDGES

FOLDED VIEW
(IF APPLICABLE)

TOLERANCE UNLESS NOTED				TITLE: SHEETMETAL DEMO		
OPERATION	PLACES IN DIMENSION					
	0.0	0.00	0.000	DRAWN	M. BRADDOCK	
MACHINING				CHECKED	B. HOLLON	
SHEETMETAL (SHEAR, BEND)	±0.1	±0.060	±0.030	SIZE A	DWG. NO. EML2322L-030	REV A
WELDING	±0.1	±0.060				
ANGULAR DIMS	±5	±2		SCALE: 1:1		SHEET 1 OF 2

SolidWorks Student License
Academic Use Only

4 3 2 1

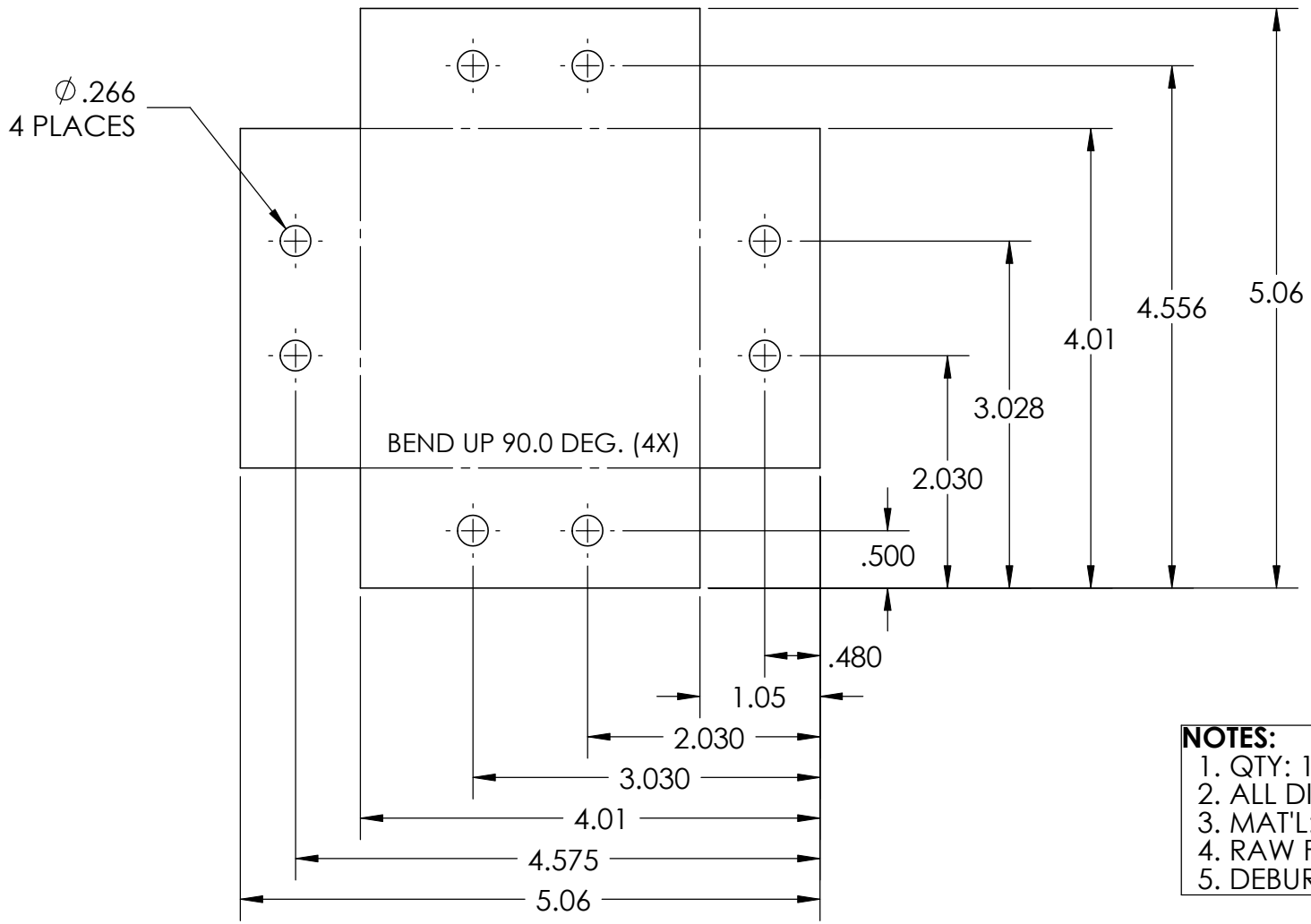

NOTES:
1. QTY: 1
2. ALL DIMS IN INCHES
3. MAT'L: 0.049" STEEL SHEET
4. RAW FINISH IS OKAY
5. DEBUR ALL EDGES

UNFOLDED VIEW
(IF APPLICABLE)

TOLERANCE UNLESS NOTED			
OPERATION	PLACES IN DIMENSION		
	0.0	0.00	0.000
MACHINING			
SHEETMETAL (SHEAR, BEND)	±0.1	±0.060	±0.030
WELDING	±0.1	±0.060	
ANGULAR DIMS	±5	±2	

TITLE: SHEETMETAL DEMO

DRAWN: M. BRADDOCK

CHECKED: B. HOLLON

SIZE: A | DWG. NO.: EML2322L-030 | REV: A

SCALE: 2:1 | SHEET 2 OF 2

SolidWorks Student License
Academic Use Only